Improved solutions for steel industries with Graphite Technologies

- **PICKLING LINE BATHS**
- **ACID REGENERATION PLANTS**

Equipments

GT-BLOC
GT-CUBIC
GT-DISC
GT-PLATE
GT-BATH

Materials

GT-KELITE
GT-KELITE+
GT-FLON
GT-OXY FLON

Source ANDRITZ

Graphite Technology

www.graphite-technology.com

202003

Welcome to GRAPHITE TECHNOLOGY world

GRAPHITE TECHNOLOGY specialist in all types of graphite equipment for chemical processes industries, has developed a comprehensive range of designs to cut plant processing costs and improve reliability thanks to major technology improvement in the design of the equipment.

Graphite Technology designs, manufactures and implements tailor-made constructions to solve heat exchangers problems, and to improve process plant efficiency.

Our Mission

Thanks to our knowhow in engineering, construction, manufacturing and services, our aim is to offer and supply to you perfect process systems, equipment and components made of graphite for the harshest operating conditions. Elevated temperature, high corrosion, pressure,….

Our product are used for …

- Heating and cooling pickling bath liquor
- Heating and cooling pickling liquor in acid regeneration plants
- Heating and cooling leaching liquor

for carbon steel, stainless steel, zinc and special alloys manufacturing plants

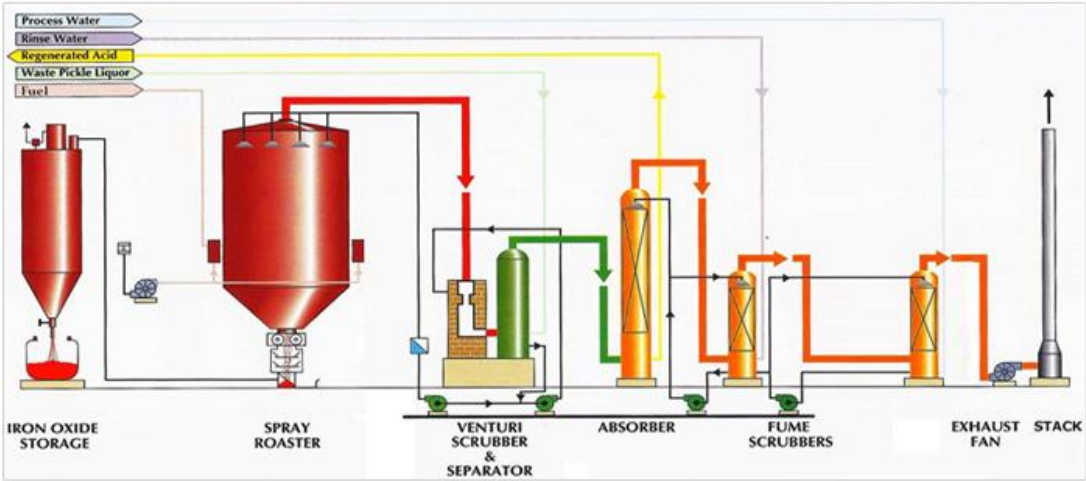

Graphite Technology

www.graphite-technology.com

Graphite Material

The word graphite originated from Ancient Greek “graphein”, means “write”.
Graphite, a synthetic or a natural form of carbon, is usually produced at temperatures above 3000°C.
Graphite has a high melting temperature of 3500°C and is an excellent conductor of heat and electricity.
Graphite is usually in the form of a black soft solid bonded in layers.

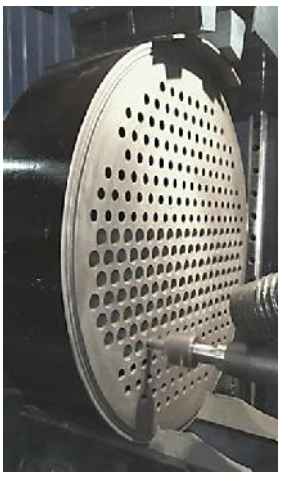

Graphite is characterized by its high level of corrosion resistance and its thermal conductivity is much greater than most comparable corrosion resistant materials.

Manufacturing process, of graphite raw material, requires a lot of energy during compression, baking and graphitization. A very long process which can take several months.

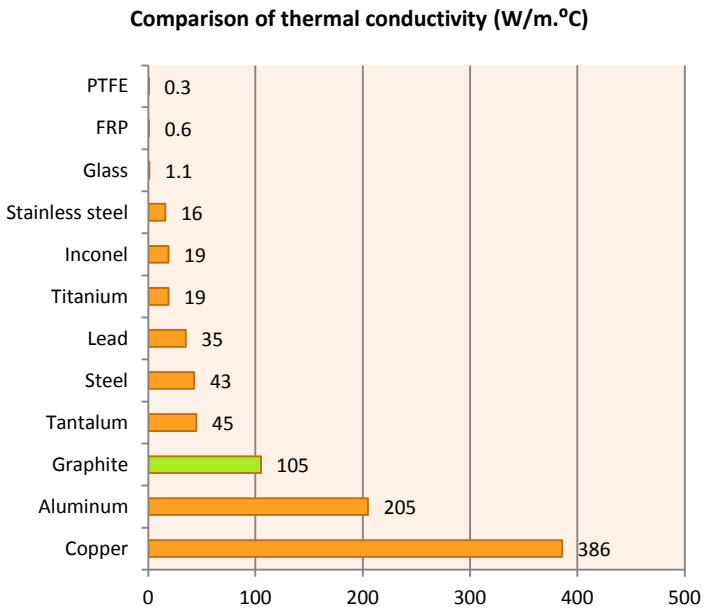

Each producer of raw graphite has its own specifications and formulations which are tailored for final application.

We select and test into its pilot equipment the graphite which will give the best balance between resistance to corrosion, to thermal and mechanical shocks.

Our grade GT-KELITE+ TOYO is the world highest quality of graphite for chemical process equipment thanks to our close collaboration with TOYO TANSO (Japan).

Our unique TOYO’s “ultrafine grain” (down to 8µm size) with very high mechanical and thermal strength, high thermal conductivity withstand the harshest operating conditions.

TOYO TANSO
Inspiration for Innovation

202003

Graphite Technology

www.graphite-technology.com

Impregnated Graphite

Impregnation of graphite will give imperviousness property. We use proprietary resin and latest technology which shorten production lead time. Four grades of impregnated graphite, using two different resin types to cover steel industries applications.
We are the world leader to supply “real” PTFE impregnated graphite adapted for most corrosive processes (oxidative media).
Our GT-FLON and GT-OXY FLON show extraordinary corrosion properties outclassing traditional phenolic resin impregnated graphite.

* typical values	GT-KELITE	GT-KELITE+	GT-FLON GT-OXYFLON
Applications	Carbon steel pickling liquor heating/cooling		Stainless steel pickling liquor heating/cooling
Graphite grain size (mm)	0.8 - 0.5	0.043 - 0.008	0.043- 0.008
Impregnant type	Phenolic		Pure PTFE
Density	1.82	1.89	1.92
Flexural strength (MPa – ASTM C651)	27.0	43.0 - 50.0	32.0 - 42.0
Compression strength (MPa – ASTM C695)	65.0	118.0 - 159.0	91.0 - 130.0
Young modulus (GPa – ASTM C559)	9.0	11.0	11.0
Max permissible material temperature (°C)	180	220	300
Recommended for	Moderate pressure / temperature / corrosion. Cooler. Hydrochloric and sulfuric acids	Higher pressure / temperature. Frequent thermal cycling. Higher corrosion resistance. Steam heater.	Frequent thermal cycling, high temperature. Nitric acid and oxidative media/

GT-FLON®& GT-KELITE® are registered trademark

Our R&D team can help you to select the right material grade. For specific request we can also proceed to corrosion tests in lab or in your plant to define the optimized material for your chemical process.

Steel pickling liquor expert

Our materials :

- Grade GT-KELITE and GT-KELITE+ for carbon steel pickling liquor (HCl or H2SO4)
- Grade GT-FLON or GT-OXY FLON for stainless steel pickling liquor, nitric bath.

Main advantages are :

- SHOCK PROTECT® design of block against water and steam hammering.
- STABLE LOAD® design of compression spring against stress fatigue. Reduce cycling mechanical fatigue up to 95% compared to competitors.
- STRESS FREE® which avoid piping stress on graphite components
- HAMMER PROOF® unique device to prevent damage from steam or water hammering
- C-HARD® enhancement of wear resistance
- Optimized thermal sizing with high compacity.
- GT-FLON and GT-OXY FLON® "real" PTFE graphite impregnation (unlike "coating")
- Fast delivery of spare parts of all design.
- Gasket without steam heating seating process.
- Fine and TOYO's ultrafine grain graphite to reduce thermal shock sensitivity. Heating and cooling in the same equipment.

GT-FLON & GT-OXY FLON® for stainless steel pickling liquor, nitric acid

We developed a grade having exceptional corrosion and surface properties.
Unlike competition , our material is impregnated at core and is not a superficial coating.
Our unique process bring exceptional corrosion resistance compared to traditional phenolic resin impregnation.
We own a unique process of manufacture.
The surface energy of graphite is reduced after PTFE impregnation which reduce also fouling speed and ease cleaning process.
This material is a must for stainless steel pickling bath (HF + HNO3) and some dissolving bath.
It allows us to guarantee customer longer life time against corrosion.

Micrography of our impregnated graphite

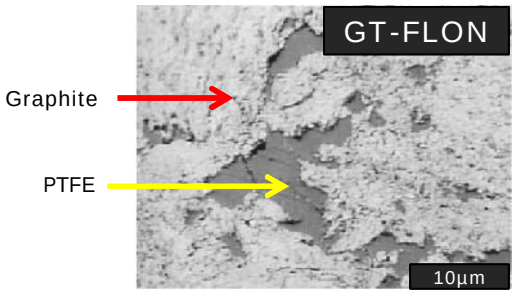

202003

Graphite Technology

www.graphite-technology.com

GT-BLOC : round modular blocks heat exchanger

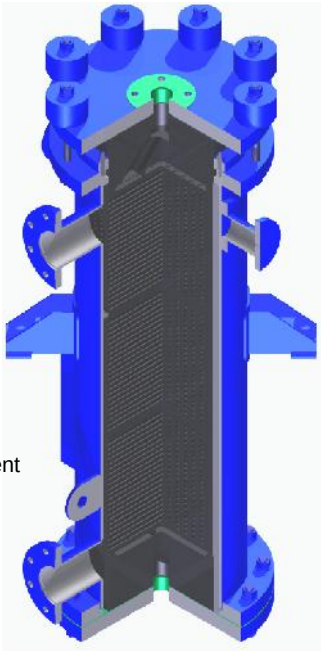

- Compactness
- Modular construction
- Fast assembly / disassembly
- Standardized spare parts
- Possibility to use corrosive media on both side with a protective coating / lining on shell side.
- Available in GT-KELITE(+) / GT-FLON
- From 0.3 m^2 to 800 m^2.
- Monoblock or multiblocks configurations
- Adapted for dirty and erosive media

In standard
- SHOCK PROTECT®
- STABLE LOAD®
- STRESS FREE®
- FILT-IN®
- HAMMER PROOF ®

Optional :
- C-HARD® erosion reinforcement

GT-CUBIC : cubical block heat exchanger

- Possibility to use corrosive media on both sides (economizer)
- No gasket between 2 sides media (no contamination with gasket failure)
- Outstanding corrosion resistance (GT-KELITE(+) / GT-FLON)
- Monoblock or multiblocks configurations
- Adapted for dirty media

In standard
- STRESS FREE®

Optional :
- HAMMER PROOF®

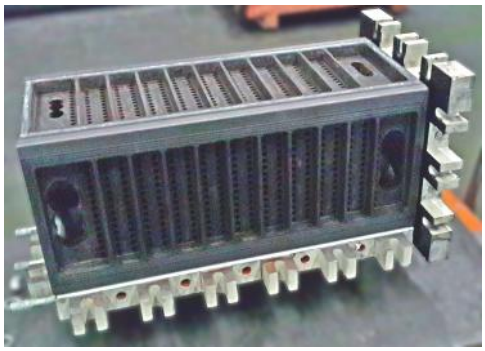

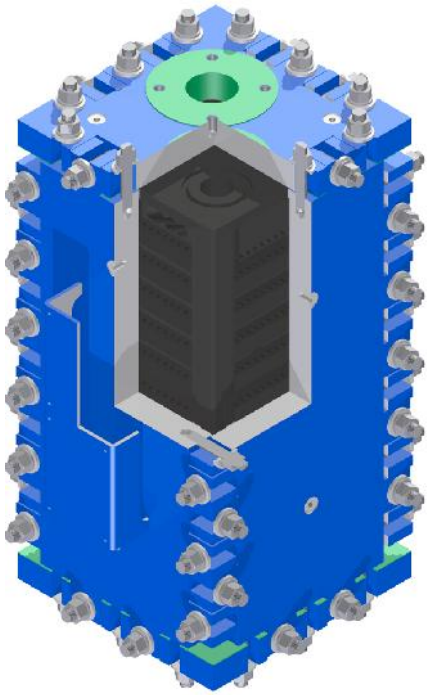

GT-DISC : disc and frame heat exchanger with slot or annular groove design

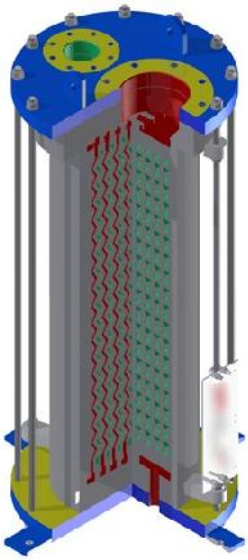

- Excellent heat transfer
- Compactness
- Modular design with ability to reduce or extend capacity or footprint
- Fully dismantle without heavy components, easy cleaning
- Possibility to use corrosive media on both sides (economizer)
- Low pressure drop, free-flow
- Auto dry surface.
- Available in GT-KELITE+ / GT-FLON / GT-OXYFLON
- From 0.5 m^2 to 50 m^2.
- Temperature up to 500 °C, pressure up to 10 barg
- High performance with viscous media.
- Adapted for dirty media

In standard
- STRESS FREE®

Optional :
- HAMMER PROOF®

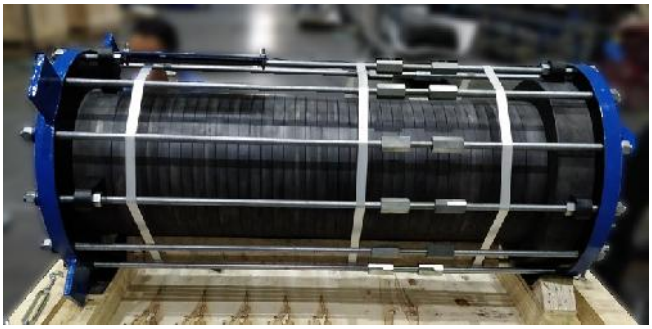

GT-PLATE : plate and frame heat exchanger

- High performances
- Compactness
- Modular design with ability to reduce or extend capacity or footprint
- Possibility to use corrosive media on both sides (economizer)
- Available in GT-KELITE+ / GT-FLON / GT-OXYFLON
- From 0.3 m^2 to 80 m^2
- Temperature up to 300 °C, pressure up to 8 bar
- Recommended for clean media

In standard
- STRESS FREE®
- FILT-IN®

Optional :
- HAMMER PROOF®

GT-BATH : immerged heater/cooler

- Equipment immerged in the process bath or tank
- No pump and circulation piping required
- Possibility to use corrosive media on both sides (economizer)
- Economical, easy adaptation for existing processes
- Available in GT-KELITE(+) / GT-FLON / GT-OXYFLON
- Outperform immerged heater in Tantalum or PTFE pipe thanks to high turbulence feature
- Low footprint, light structure without steel parts
- Adapted for dirty media

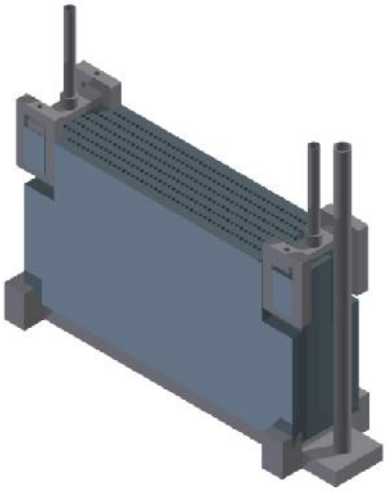

After sales and maintenance services

- Start-up & Operating assistance
- Dedicated maintenance during lifetime of your units
- Quick support - Field Service – Spare-Parts available
- ➢ We can replace and repair your existing graphite parts (cubic, blocks, shell and tubes) at competitive price and high quality.




- Dismantle equipment
- Depollution
- Cleaning holes plugged
- Change gaskets
- Test blocks and header leakage
- Repair and change broken and corroded parts
- Reassembly and pressure test
- Report and recommendation to extend lifetime and reduce maintenance

They are using our solutions

TISCO	BAOTOU RARES METAL EARTH	ACERINOX	RODACCIAI
LISCO	YONGJING STAINLESS STEEL	OUTOKUMPU	STEULER
POSCO	SOUTHWEST STAINLESS STEEL	THYSSENKRUPP	BENTELER
SMS	DINGXIN	ARCELOR	KOCH
BAOSTEEL	SALZGITTER	DANIELI	NISTERHAMMER
			…

Europe – Middle East - Africa
17, Route de Fontenoille
B-6820 Sainte Cecile – BELGIUM
Phone : +32 61 29 00 20
emea@graphite-technology.com

Asia
Graphite Technology Ltd
#801 workshop , No.9 Sinosteel Avenue, Huaxi street, Changxing County, Zhejiang Province, Zip code:313100 - China
Phone : +(86) 512-85557772
asia@graphite-technology.com

South Americas
Graphite Technology
Phone : +(54) 911 57309438
latam@graphite-technology.com

India
Graphite Technology Ltd
C 14/2 MIDC - Satpur
Nashik- 422007 - Maharashtra – INDIA
Phone : +(91) 9730166052
india@graphite-technology.com

202003